# CD 915
## Connecting cable

- Sturdy metal coupling ring
- Flexible lead design
- Good stripping properties
- High protection class

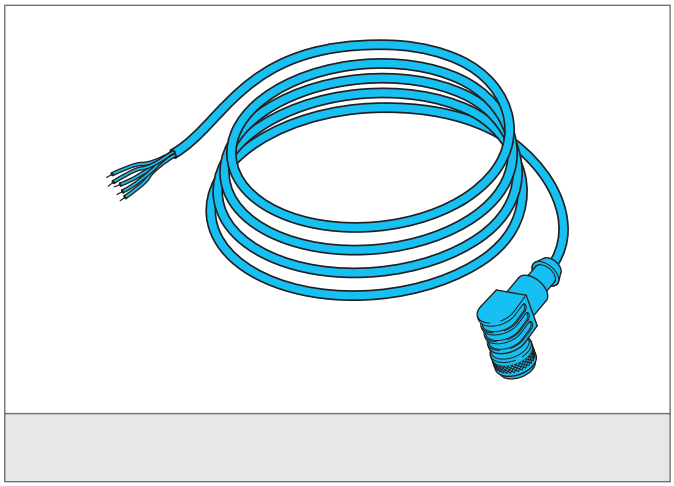

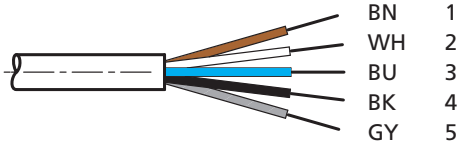


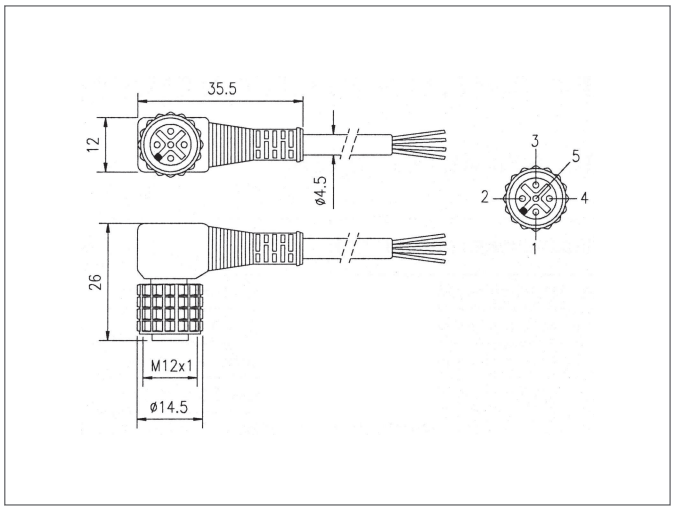


### Safety instructions

All the installation, connection and safety regulations, as per our technical information, have to be strictly adhered to.
The set-up of the products have to be made by skilled staff, only.
Repair exclusively made by di-soric.

| TECHNICAL INFORMATION (typ.) | +20°C, 24V DC |
|---|---|
| Operating principle | Connection cable |
| Size | M12 (thread) |
| Design | angled |
| Length | 15.000 mm |
| Characteristics | metal coupling ring |
| Protection class | IP 67 |
| For | SLB... and emitter SLI... |
| Material | PVC (Cable) |
| Connection | Socket M12, 5-poled, flying leads |